REV.	DESCRIPTION	DATE	BY
I	REMOVE OPTIONAL BRAKE	19 JUN 23	DJB

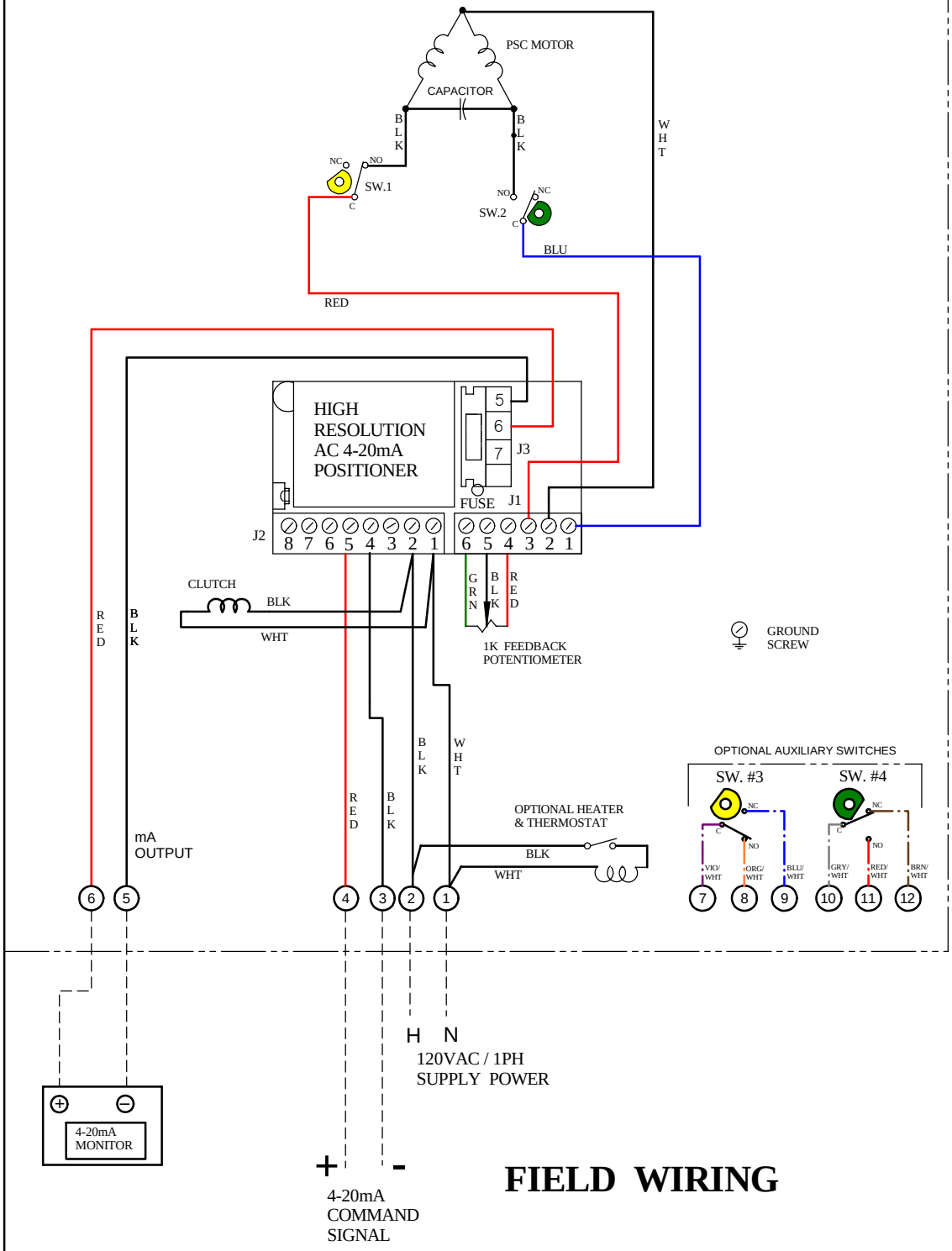

FIELD WIRING

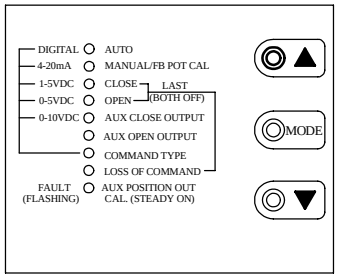

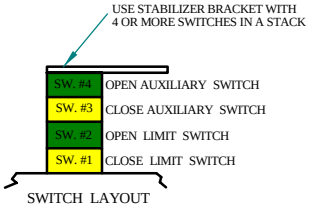

NOTE:
ACTUATOR SHOWN IN OPEN POSITION, 20mA REPRESENTS OPEN POSITION. WHEN CALIBRATING THE ACTUATOR, DO NOTADJUST THE FEEDBACK POTENTIOMETER OR LIMIT SWITCHES - THEY ARE FACTORY SET AND FURTHER ADJUSTMENT COULD CAUSE THE ACTUATOR TO STOP WORKING.

TO CALIBRATE:
THE MODE BUTTON SELECTS A FUNCTION AND THE INDICATOR FOR THE SELECTED MODE TURNS ON STEADY. PUSHING THE MODE BUTTON SAVES ANY NEW SETTING OF THE CURRENT MODE BEFORE SWITCHING TO THE NEXT MODE. THE ADJUST UP AND ADJUST DOWN BUTTONS ARE USED TO MAKE ADJUSTMENTS TO CURRENT MODE.

1. Before applying power ensure that the actuator is properly mounted and wired.
2. Apply power to the actuator, there is no need for an input signal during calibration.
3. Push the mode button until the yellow "MANUAL/FB POT CAL" LED is illuminated.
   NOTE: The LED may be flashing at different speeds throughout the next several steps.
4. Use the adjust up/down buttons to move the actuator and verify that the limit switches are set past the desired open and close position, when satisfied move the actuator to mid stroke.
5. If LED is solid move to step #7.
6. If LED is flashing, loosen the potentiometer gear on the actuator shaft and rotate the potentiometer gear until the LED stops flashing - this indicates the center of the potentiometer travel. Note that the LED will flash at a slower rate the farther away from the mid position it gets. Once the LED is on solid tighten the potentiometer gear on the actuator shaft.
7. Push the mode button until the "CLOSE" LED illuminates, use the adjust up/down buttons to drive the actuator to the desired close position. Be sure the close limit switch does not engage.
8. Push the mode button until the "OPEN" LED illuminates, use the adjust up/down buttons to drive the actuator to the desired open position. Be sure the open limit switch does not engage.
9. If OTR-100 option is installed follow Auxiliary Open/Close Setup in the manual, if not proceed to next step.
10. Push the mode button until "COMMAND TYPE" LED illuminates use the adjust up/down buttons to select the correct input signal (4-20mA, 1-5Vdc, 0-5Vdc, 0-10Vdc or digital). If 0-5Vdc or 0-10Vdc is selected , the LOSS OF COMMAND feature is not available if selected proceed to step 12.
11. Push the mode button until the "LOSS OF COMMAND" LED illuminates, this determins the position of the actuator upon loss of command signal. Use the adjust up/down buttons to select open/close or stay in last position.
12. If ORT-100 or OTX-100 are installed see manual.
13. Push mode button until "AUTO" LED illuminates, calibration is complete. If command signal wiring was not connected do so now. If command wiring was connected, the actuator should have moved to that position.

ICI Indelac Controls, Inc.
Florence, Ky. 41042

WIRING DIAGRAM, ASC SPRING RETURN, 115VAC, CLUTCH, WITH 4-20mA HIGH RESOLUTION POSITIONER, TRANSMITTER, AND OPTIONAL HEATER, & 2 AUXILIARY SWITCHES

WJR	27SEP16	W160927