REV.	DESCRIPTION	DATE	BY
1	ADDED HEATER, REMOVED AUX. SWITCHES; UPDATE DWG	21JUL16	WJR

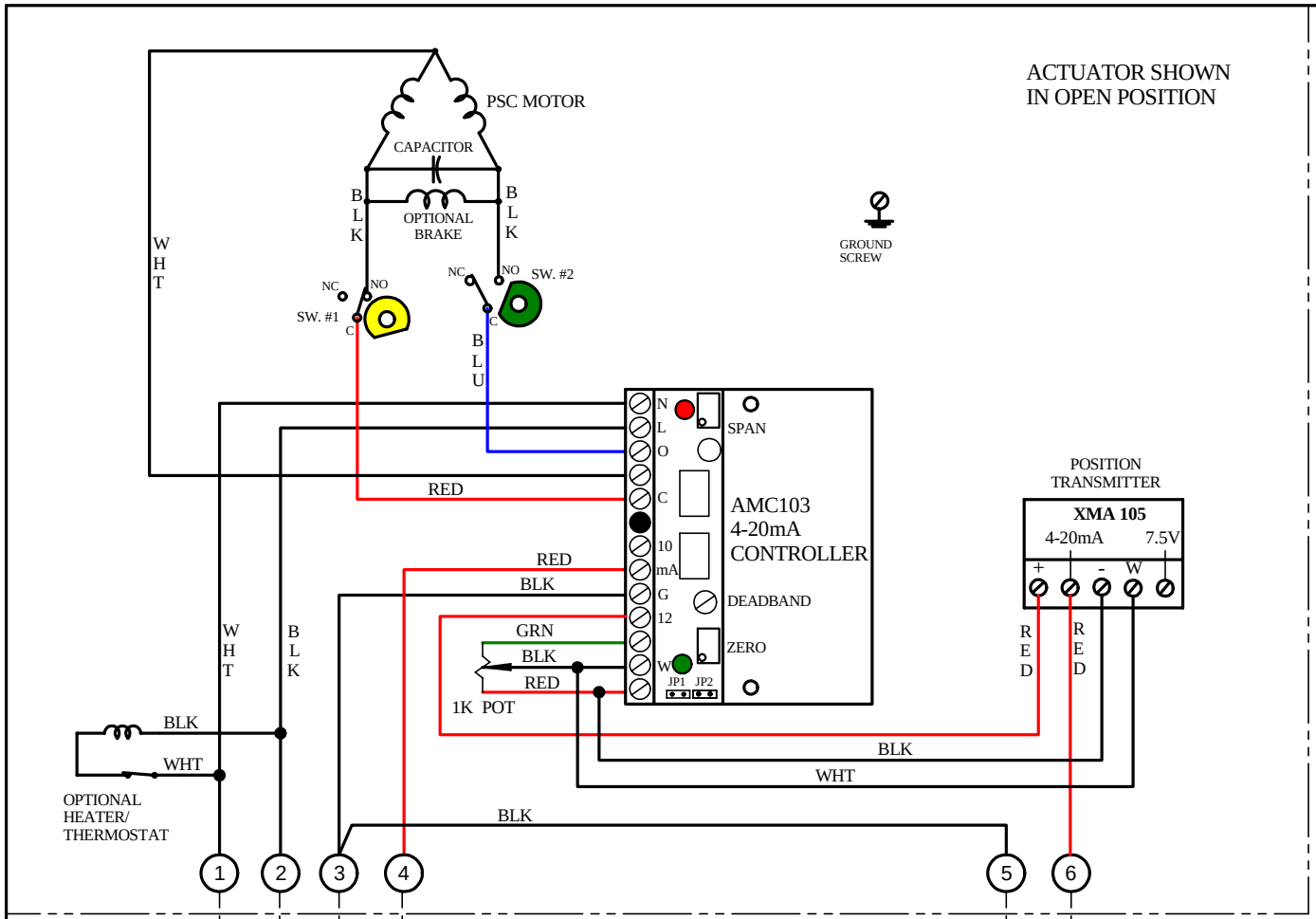

FIELD WIRING

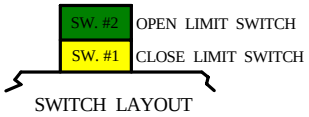

INPUT SIGNAL

INPUT SIGNAL RANGE	JP1	JP2
0-10V		
4-20mA & 0-5V		
1-5V		

NOTE:
THE FEEDBACK POTENTIOMETER AND LIMIT SWITCHES HAVE BEEN SET AT THE FACTORY - THEY DO NOT REQUIRE FURTHER CALIBRATION.

TO CALIBRATE THE OPEN AND CLOSE POSITION USE THE TRIM POTS LABELED Z (ZERO) FOR CLOSE AND S (SPAN) FOR OPEN.
FEEDBACK TRANSMITTER CAN BE ADJUSTED TO GIVE APPROPRIATE OUTPUT SIGNAL TO MATCH POSITION BY ADJUSTING THE S (SPAN) & Z (ZERO) POTS ON THE TRANSMITTER BOARD.

I C I Indelac Controls, Inc.
Florence, Ky. 41042

WIRING DIAGRAM, 115VAC "R" SERIES ACTUATOR WITH COMPACT AMC-103A 4-20mA POSITIONER, 4-20mA TRANSMITTER & OPTIONAL HEATER / THERMOSTAT & BRAKE

07JAN15	OLD PRINT #: **WDR4B-4to20**	**W150107B**
WJR		